УДК 336.719

Factors Affecting the Intention to Use Digital Banking Services: A Case Study on Elderly Customers in Vietnam[1]

Nga Tran Thị Thanh

University of Finance – Marketing,
778 Nguyen Kiem str., Ward 4, Phu Nhuan District, Ho Chi Minh City, Vietnam.
E-mail: ngatcnh@ufm.edu.vn

Based on Technology Acceptance Theory (TAM) and Linear Structural Model (SEM), the author predicts factors affecting the intention to use digital banking of customers from 50 years old in Vietnam. For this study, 350 valid responses out of 398 survey participants have been collected and utilized for data analysis, digital banking are found easy to use, helpful, reliable, and less risky for elderly customers, which might increase the elderly's demands and intentions to use them. Regarding the behaviors of elderly customers, this study will provide an insight into elderly customers' expectations accessing digital banking services during the COVID-19 pandemic in emerging markets. Furthermore, the researcher proposes an integrated model to predict behaviors and examines main.

***Key words*:** digital banking; elderly; SEM; Technology Acceptance Theory (TAM).

JEL Classification: G21, G41.

DOI: 10.17323/1813-8691-2023-27-2-270-289

For citation: Nga Tran Thị Thanh. Factors Affecting the Intention to Use Digital Banking Services: A Case Study on Elderly Customers in Vietnam. *HSE Economic Journal.* 2023; 27(2): 270–289.

---

[1] The research topic was supported by The Youth Incubator for Science and Technology Programme, managed by Youth Promotion Science and Technology Center – Ho Chi Minh Communist Youth Union and Department of Science and Technology of Ho Chi Minh City, 06/2022/HĐ-KHCNT-VƯ; signed on 30 th, December, 2022.

Nga Tran Thị Thanh – Faculty of Finance – Banking.

The article was received: 17.04.2023/The article is accepted for publication: 15.05.2023.

1. Introduction

Chen, Chen, Lin, Liu (2019) believes that information technology (IT) will be the trending field on which all other businesses' activities shall depend. Digital banking services are the current trend of customers [Singh, Srivastava, Sinha, 2017]. Customers' experience is always a great concern of organizations [Kumar, Ramakrishnan, Krishnamacharyulu, 2021]. The COVID-19 pandemic has shaped many changes in the business models [Seetharaman, 2020]. Changes in customers' behaviors towards digital banking have been recognized during the COVID-19 pandemic [Baldwin, Mauro, 2020; Wojcik, Loannou, 2020]. Technological innovations through Automated Teller Machine (ATM) platforms, online banking, mobile banking, Unified Payments Interface (UPI) enhance bank solvency [Glavee-Geo, Shaikh, Karjaluoto, Hinson, 2020] and boost bank-customer connections [Ozili, 2018]. It is noted that differences in culture, age, area from countries to countries result in different performances and growth of digital banking [Alnemer, 2022; Takieddine, Sun, 2015]. Consequently, understanding the factors affecting the intention to use digital services of every single customer is essential for the banking management [Liébana-Cabanillas, Marinković, Kalinić, 2017]. Numerous studies on technology used among older adults have been conducted to response to the trend of the world's aging population [Pan, Jordan-Marsh, 2010] including social networking for older adults [Braun, 2013]; telehealth for the elderly [Zhou et al., 2019]; anti-aging technology [Chen, Chan, 2014]; digital games for older adults [Wang, Sun, 2016]; technology taking care of older adults [Quaosar, Hoque, Bao, 2018]; the use of technology in learning and reading among the elderly [Lai, 2020].

It is obvious that documents on banking services focus on E-banking [Anouze, Alamro, 2019; Chi, 2021; Haq, Awan, 2020; Trang, 2022], M-Banking [Baabdullah, Alalwan, Rana, Kizgin, Patil, 2019; Hamidi, Safareeyeh, 2019; Merhi, Hone, Tarhini, Ameen, 2020; Picoto, Pinto, 2021; Singh, Srivastava, 2020], I-Banking [Alalwan, Dwivedi, Rana, Algharabat, 2018; Bharti, 2016; Hamidi, Safareeyeh, 2019; Oruç, Tatar, 2017]; digital banking [Alnemer, 2022; Egala, Boateng, Mensah, 2021; Kaur, Kiran, Grima, Rupeika-Apoga, 2021; Montazemi, Qahri-Saremi, 2015]; relationship between digital banking adoption and demographic characteristics of gender, age, education level, occupation and income [Alnemer, 2022], which shows that males aged from 25–49 years with better education, income and still in service are likely to use digital banking services. These results reveal a gap in the research literature on the intention to use digital banking services among elderly customers, especially after the COVID-19 pandemic. Despite a few studies on factors affecting the intentions to use digital banking, none of in-depth research has been conducted on digital banking for a specific customer age. As a response to the world's aging population, worldwide banks need to manage the factors attracting the elderly to use digital banking. As the greatest aging population in the world, it is common in Vietnam to make financial transactions in a traditional way, specially among the elderly [Nam, Duc, 2021]. According to the 2021 statistical report, the elderly population increases by 4.35% per year while the total population growth rate is 1.14% per year in the period of 2009–2019. The group aged 60–69 experiences the highest growth of 3.1 million people while figures of 70–79 and from 80-years-olds are 200,000 and 570,000, respectively. In details, the group aged 60–64 increases approximately 7.5% per year while the 65–69-years-olds grows 5.62% per year. Recognizing the above, it is highly recommended that banks need to update and detect factors affecting the intention to use digital banking of the elderly [Nguyen, Nguyen, Mai, Tran, 2020].

From that, this study will provide an insight into elderly customers' expectations accessing digital banking services during the COVID-19 pandemic in emerging markets. Furthermore, the researcher proposes an integrated model to predict behaviors and examines main factors affecting the intention to use digital banking services among elderly customers in Vietnam.

2. Theoretical Basis

2.1. Digital banking

There are many different perspectives on approaching digital banking services, but digital banking in this study is considered as a method performing all banking transactions such as depositing, transferring, withdrawing, managing current and savings accounts, lending, bills payment, financial products, and account services on electronic platforms [Ling, Fern, Boon, Huat, 2016; Windasari, Kusumawati, Larasati, Amelia, 2022; Anggraeni, Hapsari, Muslim, 2021].

Digital banking services also requires innovations for customers across mobile digital or AI devices, payment strategies, data, blockchain, API, distribution channels and technology [Mbama, Ezepue, Alboul, Beer, 2018]. Through digital devices, the scope of digital banking includes electronic banking services (e.i. T-banking, E-banking, M-banking, debit cards, ATMs and Paypal machines at electronic point-of-sell (PoS). Telephone banking (T-banking) allows customers to transact via mobile phones [Alalwan, Dwivedi, Rana, Simintiras, 2016]. Online banking (E-banking) can perform internet banking services at home [Martins, Oliveira, Popovic, 2014]. Mobile banking (M-banking) allows financial services to be managed via mobile devices [Tam, Oliveira, 2017].

2.2. The role of technology to the elderly

There are many different views on the definition of "the elderly" among countries around the world. In the United Kingdom and the United States of America, only people from 65 years old are considered the elderly while in developing countries such as Malaysia, Laos, Cambodia, it is from 55 years of age and above [Wikipedia, 2012]. The United Nations defines "elderly people" as those aged 60 years and above [Hutton, 2008]. In Vietnam, a man or a woman must be over 50 years old to be considered "the elderly" [Giao; Dat, 2014; Suoranta, Mattila, 2004]. Paul (2009) notes that it is necessary to base on age, income level, working capacity, health status, time, and relationship with other generations to give an accurate definition of the elderly. With the increasing aging population in Vietnam and a lot more elderly people are living on their own [Nam, Duc, 2021], the author believe that this study's implications are significantly important for worldwide managers in banking industry in general, especially those in developing countries.

2.3. Theories/Models related to the use of technology of the elderly

Regarding technology acceptability, among popular models of Rational Action Theory [Fishbein, Ajzen, 1977], Acceptance Model [Davis, 1989], Theory of Planned Behavior planning [Ajzen, 1991], Extended Technology Acceptance Model (TAM2) [Venkatesh, Davis, 2000], the

most widely used to predict the adoption of technology of the Technology Acceptance Model (TAM) currently is valid with different samples in many different situations [Davis, 1989]. This study believes that the success of technology adoption largely depends on users' attitudes and perceptions about the products/applications, which in turn depends on the ease or difficulty that users have experienced. Technology Acceptance Model Theory (TAM) provides a useful tool for managers to assess factors affecting the acceptance or rejection of a new technology, especially elderly customers who are reluctant to change [Abu-Bader, Rogers, Barusch, 2003]. Chau, Lai (2003) argues that the technological environment of digital banking services is completely different from other conventional business activities; therefore, the current Technology Acceptance Model (TAM) is not sufficient to explain the adoption of digital banking. In addition to conventional structures of Technology Acceptance Model (TAM) (i.e. Perceived Ease of Use), the study proposes variables related to the intention to use digital banking services of elderly customers. Proposed by [Ajzen, 1991; Fishbein, Ajzen, 1977], the Theory of Planned Behavior (TPB) develops an additional element of Behavioral Control from the Theory of Reasoned Action (TRA). The Theory of Planned Behavior (TPB) believes that the behavioral intention of customers will be affected by Attitude, Subjective Norm, Behavioral Control. Taylor, Todd (1995) suggests combining TPB and TAM to overcome each model's limitations that the TAM model pays much attention to the perceived impact on user acceptance while Attitude variable in the TPB model favors an explanation of consumer perception.

2.4. The impact of research factors on the elderly's intention to use digital banking services

Perceived Usefulness (PU): refers to an extent to which customers believe that using a product or service helps them improve their job performance [Davis, 1989]. If customers find digital banking services are more useful, then they will posibly try to use the new technology instead of the traditional way and vice versa. Furthermore, technology improves the quality of life of older adults in various ways [Bobillier-Chaumon, Michel, Tarpin-Bernard, Croisile, 2014] so Perceived Usefulness will influence the intention to use technology of the elderly. Several studies find a positive relationship of Perceived Usefulness (PU) to the intention to use M-banking services [Baabdullah et al., 2019; Hamidi, Safareeyeh, 2019]; E-banking [Anouze, Alamro, 2019]; other services [Dutot, Bhatiasevi, Bellallahom, 2019]; the internet [Pan, Jordan-Marsh, 2010]; social networks [Braun, 2013]; Telehealth [Zhou et al., 2019]; anti-aging technology [Chen, Chan, 2014]. Therefore, the study proposes the following hypothesis:

H1: Perceived Usefulness has a positive effect (+) on the intention to use digital banking services.

Perceived Ease of Use (PEOU): Perceived Ease of Use refers to users' confidence that technology is easy to be carried out on the system and helps to save time [Singh, Sinha, Liébana-Cabanillas, 2020]. Many differences have been found in the way young and old customers apply technology in their daily lives [Mitzner et al., 2010] so supporting the elderly to accept and use a particular technology is significantly important [Tsai, Shillair, Cotten, Winstead, Yost, 2015]. Many studies have found a positive relationship between Perceived Ease of Use and the intention to use banking services [Alalwan et al., 2019; Baabdullah et al., 2019], consistent with [Braun, 2013; Pan, Jordan-Marsh, 2010; Zhou et al., 2019] in which PE has positive influences on the

elderly's intention to apply technology in different fields. Therefore, the study proposes the following hypothesis:

H2: Perceived Ease of Use has a positive (+) influence on intention to use digital banking services.

Risk Perception (RP): Haq, Awan (2020) believes that matters on the level of security and privacy of customers during and after the transaction process or any bank's service provision are all risk-related issues. Ananda, Devesh, Al Lawati (2020) argues that security can be seen as one of the most important reasons for customers' opposition to banking services, so it is crucial for banks and financial organizations to build trust in customers in new banking services. Risk Perception influences the customers' intention to use banking services [Ananda et al., 2020; Anggraeni et al., 2021; Chen, Chan, 2014; Haq, Awan, 2020; Lai, 2020]. When sensing possible risks, customers will tend to refuse to use banking services [Li, Ma, Chan, Man, 2019]. From that, this study proposes the following hypothesis:

H3: Risk negatively affects (–) the intention to use digital banking services.

Attitude (AT): Several research have been conducted on attitudes of customers to apply technology in a particulart service or field. The paper of Simonson, Maurer, Montag-Torardi, Whitaker (1987) refers to an individual's attitude towards a new technology. AT is considered as a negative emotional response related to customers' unsatisfying experience using technology [Meuter, Ostrom, Bitner, Roundtree, 2003]. Some studies suggest that AT negatively affects technology adoption [Chen, Chan, 2014; Deng, Mo, Liu, 2014; Ke, Lou, Tan, Wai, Chan, 2020]. Deng et al. (2014) shows that AT positively affects on behavioral intentions of 50-year-olds and above but does not significantly influence the group aged from 40–50. Many studies have been conducted on the impact of attitudes on the elderly's technology adoption in different fields such as mobile health services [Deng et al., 2014], assistive technology for moving stairs [Tural, Lu, Cole, 2020] and tablet use [Ke et al., 2020]. Most studies reveals that the elderly has positive attitudes towards technology and by showing interests in adopting hi-tech products/services. If these older customers are not fans of technology, they will not intend to apply any available technology. Therefore, this study hypothesized this relationship as follows:

H4: Attitude positively impacts on the intention to use digital banking services.

Behavioral Control (BC): Ajzen (1991) defines that Behavioral Control is the combination between confidence and the ability that an individual controls himself/herself in performing a behavior, reflecting how easily or hard the behavior is performed. This partially depends on the availability of resources and opportunities to perform the behaviour. It is found that the Behavioral Control has a positive influence on the intention to use banking services [Ahmad, Rasul, Yousaf, Zaman, 2020; Alalwan et al., 2019; Ananda et al., 2020; Anggraeni et al., 2021; Anouze, Alamro, 2019; Choudrie, Junior, McKenna, Richter, 2018; Kizgin, Jamal, Dey, Rana, 2018; Mbama et al., 2018]. Based on the evidence of the above studies, this relationship is hypothesized as follows:

H5: Behavioral Control positively influences (+) intention to use digital banking services.

Subjective norm (SN): reflects the degree of support or opposition of related influencers affecting the intention to use a technology service and the motivation of influencers [Ajzen, 1991; Taylor, Todd, 1995]. According to the theory of intended behavior, the support of family, friends, and colleagues is an important factor in promoting behavioral intentions. Previous studies [Ahmad et al., 2020; Ananda et al., 2020; Lai, 2020] have suggested that Subjective Norm

has a positive effect on behavioral intention, which in turn affects intention to use banking services. Based on the above, the study proposes the following hypotheses:

H6: Subjective norm positively affects (+) intention to use digital banking services.

Table 1.

Summary of variables in the research model

Variable	Sympbol	Expectation	Related studies
Intention to Use	IU	(+)	Alalwan et al., 2019; Anouze, Alamro, 2019; Baabdullah et al., 2019; Chen et al., 2019; Kim, Shin, 2015; Luarn, Lin, 2005; Taylor, Todd, 1995
Perceived Usefulness	PU	(+)	Ahmad et al., 2020; Anouze, Alamro, 2019; Baabdullah et al., 2019; Dai, Palvi, 2009; Davis, 1989; Luarn, Lin, 2005; Taylor, Todd, 1995
Perceived Ease of Use	PE	(+)	Alalwan et al., 2019; Anouze, Alamro, 2019; Baabdullah et al., 2019; Chen et al., 2019; Kim, Shin, 2015; Luarn, Lin, 2005; Taylor, Todd, 1995
Risk Perception	RP	(–)	Ananda et al., 2020; Anggraeni et al., 2021; Chen, Chan, 2014; Haq, Awan, 2020; Lai, 2020
Attitude	AT	(+)	Ananda et al., 2020; Kizgin et al., 2018
Subjective Norm	SN	(+)	Ahmad et al., 2020; Ananda et al., 2020; Lai, 2020
Behavioural Control	BC	(+)	Ahmad et al., 2020; Alalwan et al., 2019; Ananda et al., 2020; Anggraeni et al., 2021; Anouze, Alamro, 2019; Choudrie et al., 2018; Kizgin et al., 2018; Mbama et al., 2018

Source: summarized by the author.

3. Research Methodologies

The survey is designed as closed-ended questions with a 5-point Likert scale, ranging from 1 "Strongly disagree" to 5 "Strongly agree". To ensure the questionaire's format and content, 5 banking experts and 5 staff are also involved. To ensure the objectivity of the questionnaire, word clarity, relevance and customer's completion time, the author has conducted a pilot study with 10 participants who had used selective digital banking services in different banks.

Table 2.

Characteristics of the research models

Criteria		Quantity	Rate, %
Sex	Male	216	61.71
	Female	134	38.29
	Total	*350*	*100*

Continues

Criteria		Quantity	Rate, %
Age	From 50–59	264	75.43
	60–69	86	24.57
	Total	*350*	*100*
Qualifications	High school	298	85.1
	College	21	6
	University	24	6.9
	Post-Graduates	7	2
	Total	*350*	*100*
Income	< 10 milliom	235	67.14
	From 10–15 million	83	23.72
	From 15–20 million	21	6
	Over 20 million	11	3.14
	Total	*350*	*100*
Have experienced digital banking services before	Yes	350	100
	No	0	0
	Total	*350*	*100*
Knowledge in banking industry	Totally clear	0	0
	Clear	316	90.29
	Unclear	34	9.71
	Total	*350*	*100*

Source: summarized by author.

For this study, 350 valid responses out of 398 survey participants have been collected and utilized for data analysis, reaching 96.69% with 216 male respondents, accounting for 61.71% and 134 female attendees, attaining 38.29%. In details, 316 respondents have known digital banking services before, taking up 90.29%; while skillful participants reach 9.71% only, or 34 out of the valid 350 reponses. Most respondents have banking knowledge, and all have been exposed to digital banking services.

Thanks to the ability to calculate measurement errors of not only official variables but potential research terms in the same theoretical model, hypothesis testing and SEM have shown many advantages, which far outweights traditional methods [Hulland, Chow, Lam, 1996]. Technically, there are two approaches to perform SEM: Structural Equation Modeling based on Covariance Based-Structural Equation Modeling (Covariance-Based SEM) and Structural Equation

Modeling based on Partial Least Squares (PLS-SEM). PLS-SEM does not establish a model fit model, which limits the author to test and confirm the theory [Hair, Babin, Krey, 2017]. Regarding the sample size, CB-SEM requires a larger database than PLS-SEM. However, similars study results are collected by either PLS-SEM or CB-SEM for sample size from 250 [Hair et al., 2017]. For this study, the author has used CB-SEM approach to analyze data via SPSS 23 and AMOS 23 software with the scale tested by Cronbach's Alph reliability coefficient, EFA exploratory factor analysis and CFA confirmatory factor analysis with tested parameters (Chi-square, degrees of freedom, p-value, CFI indexes, GFI, TLI, RMSEA) and some indicators in CB-SEM (AVE, CR, MSV) are based on standardized regression coefficients calculated from AMOS software.

4. Research Analysis

4.1. Scales tests

The research terms (PU, PE, RP, AT, SN, BC, IU) all satisfy the conditions in analyzing the reliability of the scale through Cronbach's Alpha coefficient [Nunnally, 1994]. Therefore, these observed variables are used in the EFA analysis in the next section to check the structure of the scale. Conducting EFA factor analysis for all research terms, the author indicates that KMO coefficient = 0.837 (> 0.5) and Bartlett's test has significance Sig. = 0.000 (< 0.05), which provides reliable proof of appropriate data and correlated variables to the analysis, satisfying the conditions to perform EFA. The extracted variance is 71.173% > 50% at Eigenvalue = 1.104, so the EFA model is suitable, the research terms attain both convergent and discriminant validity. Factor loading coefficients of all measured variables > 0.5 (ranging from 0.537 to 0.942) means the research acquires practical significance [Hair, Black, Babin, Anderson, 2009].

Table 3.

Test results of official scales

	Definitions and summary of the research variables	Standardized coefficients
	Perceived Usefulness (PU) (Cronbach's Alpha = 0.915, CR = 0.916, AVE = 0.734)	
PU1	Digital banking services can help me to reduce expenses	0.911
PU2	Digital banking services can help me complete my work more easily	0.906
PU3	Digital banking services can help to do transactions anytime or anywhere with internet connection	0.877
PU4	Digital banking services can help me to save time and efforts compared to conventional transactions at the banks	0.818
	Perceived Ease Of Use (PEOU) (Cronbach's Alpha = 0.851, CR = 0.862, AVE = 0.619)	
PE1	Digital banking services I think learning how to use digital banking is easy	0.627
PE2	I think the performing banking transactions via digital banking is simple	0.873
PE3	I think completing banking transactions via digital banking is easy	0.915
PE4	All in all, I find digital banking services are easy to use	0.880

Continues

	Definitions and summary of the research variables	Standardized coefficients
	Tính rủi ro (RP) (Cronbach's Alpha = 0.929, CR = 0.931, AVE = 0.770) Risk Perception (RP) (Cronbach's Alpha = 0.929, CR = 0.931, AVE = 0.770)	
RP1	Digital bankingI think that doing banking transactions via digital banking is not safe	0.895
RP2	I think passwords for transactions via digital banking services are easily hacked	0.942
RP3	I think my identity information can be stolen/hacked via digital banking	0.895
RP4	I think that the risks of digital banking far outweight the advantages	0.897
	Atitudes (AT) (Cronbach's Alpha = 0.7, CR = 0.813, AVE = 0.591)	
AT1	I think using digital banking services is a good idea	0.667
AT2	I think using digital banking services for financial transactions will be a wise decision	0.827
AT3	I think using digital banking services is interesting	0.833
AT4	Personally, I would love to use digital banking services	0.801
	Subjective norm (SN) Cronbach's Alpha = 0.755, CR = 0.819, AVE = 0,606)	
SN1	My family and friends encourage me to use digital banking services	0.734
SN2	People who influence me possibly think that I should use digital banking services	0.815
SN3	People who give me valuable opinions will recommend digital banking services to me	0.537
SN4	Banks encourage me to use digital banking services	0.880
	Behavioral Control (BC) (Cronbach's Alpha = 0.875, CR = 0.877, AVE = 0.590)	
BC1	I can control my behaviors using digital banking services	0.786
BC2	I have enough necessary sources to use digital banking services	0.827
BC3	I have enough documents, insights, and ability to use digital banking services	0.784
BC4	I can perform digital banking services on my own without any assistance	0.886
BC5	I am going to use digital banking services in near future	0.761
	Intention to Use (IU) (Cronbach's Alpha = 0.811, CR = 0.803, AVE = 0.577)	
IU1	I would love to use digital banking services	0.790
IU2	I will seriously consider using digital banking services	0.775
IU3	I would love to use digital banking services if I have a chance	0.792

Notes: AVE: Average variance extracted.

Source: summarized by the author from the Appendix.

Next, Confirmatory Factor Analysis (CFA) of the scales reveals appropriate model indexes: Chi-square/df = 1.669 < 3, of which 278 of freedom and Chi-square X^2 (df = 464.054), (P = 0.000), CFI index = 0.965, GFI = 0.911, TLI = 0.959 all > 0.9; RMSEA = 0.044 < 0.08 [Hair et al., 2009]. The normalized loading coefficients of the observed variables are all greater than 0.5 (ranging from 0.593 to 0.936). The Composite Reliability (CR) ranges from 0.803 to 0.931, both higher than 0.70, so the scales are reliable [Hair et al., 2009]. The mean Extracted Variance (AVE) ranges from 0.577 to 0.770, both higher than 0.50 [Bagozzi, Yi, Phillips, 1991; Fornell, Larcker, 1981; Hair et al., 2009]. It is concluded that the observed variables of all scales have convergent values. All scales have discriminant values because the Maximum Specific Variance (MSV) < mean Extracted Variance and SQRTAVE > correlation coefficient between terms. The analysis results show that the correlation coefficient between each pair of concepts is significantly different from 1 with P-value < 0.05. Therefore, the discriminant validity of these terms is reached [Steenkamp, Van Trijp, 1991].

Table 4.

The correlation matrix evaluates the discriminant value of the scale

Factor	Correlation coefficients						
	IU	BC	RP	PU	PE	SN	AT
IU	**0.760**						
BC	0.544	**0.768**					
RP	0.024	–0.004	**0.878**				
PU	0.508	0.559	0.049	**0.857**			
PE	0.171	0.109	–0.009	0.083	**0.787**		
SN	0.092	–0.014	–0.009	0.008	–0.004	**0.778**	
AT	0.483	0.466	–0.187	0.530	0.190	0.307	**0.796**

Intention to use scale (IU); Scale of perceived Behavioral Control (BC); Risk Scale (RP); The Perceived Usefulness scale; Perceived Ease of Use (PE) Scale; Subjective norm scale (SN); Attitude Scale (AT).

Note: the value in bold on the diagonal is the square root of AVE.

4.2. Measurement model test results

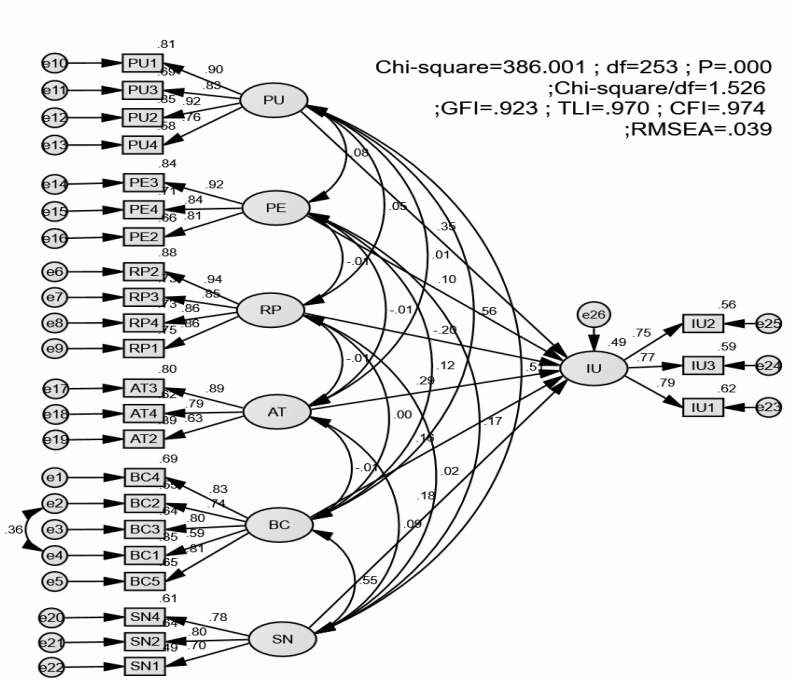

Fig. 1. SEM results of the research model (standardized)

Table 5.

Model fit test results

Indicators	Standard threshold		CFA	SEM	Previous study
	Accepted	Good			
Chi-Square/df	≤ 5	< 3	1.669	1.526	Hair et al., 2009; Hu, Bentler, 1999
TLI	≥ 0.8	≥ 0.9	0.959	0.97	Hair et al., 2009; Hu, Bentler, 1999
GFI	≥ 0.8	≥ 0.9	0.911	0.923	Hair et al., 2009; Hu, Bentler, 1999
CFI	≥ 0.8	≥ 0.9	0.965	0.974	Hair et al., 2009; Hu, Bentler, 1999
RMSEA	≤ 0.08	< 0.05	0.044	0.039	Hair et al., 2009

4.3. Discussions

Table 6.

Test of causal relationship between research terms

			Unstandardized Coefficients	Standardized Error S.E.	Critical Ratio C.R.	Standardized Coefficients	P-value	Results
Intention to use	←	Perceived Usefulness	0.233	0.045	5.205	0.349	0.000***	Accepted
Intention to use	←	Perceived Ease of Use	0.072	0.036	2.014	0.102	0.044**	Accepted
Intention to use	←	Risk Perception	–0.127	0.031	–4.12	–0.204	0.000***	Accepted
Intention to use	←	Atitude	0.173	0.033	5.313	0.287	0.000***	Accepted
Intention to use	←	Subjective Norm	0.151	0.061	2.481	0.179	0.013**	Accepted
Intention to use	←	Behavioral Control	0.101	0.045	2.241	0.159	0.025**	Accepted

Note: *** at 1% significance level, ** at 5% significance level, ** at 10% significance level.

Perceived Usefulness and attitude have the most positive influence on the intention to use digital banking of the elderly with standardized regression coefficients β = 0.349, β = 0.287, respectively. The results are consistant with previous studies [Ahmad et al., 2020; Anouze, Alamro, 2019; Baabdullah et al., 2019; Dai, Palvi, 2009; Luarn, Lin, 2005; Taylor, Todd, 1995], but the degree of influence is different due to different subjects, sample sizes or survey scopes. Many studies around the world have shown that perceived use of technology improves the quality of life of older adults in various ways [Bobillier-Chaumon et al., 2014; Nef, Ganea, Müri, Mosimann, 2013], so the Perception of Usefulness has a large impact on the intention to use technology of older people is quite relevant. Use of technology services is associated with reduced feelings of depression [Cotten, Ford, Ford, Hale, 2014] and loneliness in older adults [Francis, Rikard, Cotten, Kadylak, 2019]. Furthermore, accessibility to digital services also helps to support older adults with a greater sense of independence and social inclusion [Mitzner et al., 2010].

Therefore, customers who have positive attitudes towards digital banking services will increase their intention to use banking services [Ananda et al., 2020; Kizgin et al., 2018]. Perceived Ease of Use has a positive impact on the intention to use digital banking among the elderly with standardized regression coefficients (β = 0.102, Table 6. This result is consitent with previous studies such as (A) [Alalwan et al., 2019; Anouze, Alamro, 2019; Baabdullah et al., 2019; Chen et al., 2019; Kim, Shin, 2015; Luarn, Lin, 2005; Taylor, Todd, 1995]).

Calculation of risks negatively affects the intention to use digital banking of the elderly (Digital banking) with standardized regression coefficient (β = –0.204, Table 6). The third largest

standardized regression coefficients in the observed variables, showing that risk is a factor that reduces the intention to use digital banking services of elderly customers in Vietnam, supporting other studies of [Ananda et al., 2020; Anggraeni et al., 2021; Chen, Chan, 2014; Haq, Awan, 2020; Liu, Tai, 2016] but opposes [Luarn, Lin, 2005]. The Behavioral Control has a positive impact on customers' intention to use digital banking with a standardized regression coefficient (β = 0.159, Table 6). This relationship also once again confirms the results of previous studies on the positive impact of Behavioral Control on the intention to use Digital banking, consitent with [Ahmad et al., 2020; Alalwan et al., 2019; Ananda et al., 2020; Anggraeni et al., 2021; Anouze, Alamro, 2019; Choudrie et al., 2018; Kizgin et al., 2018; Mbama et al., 2018]. The Subjective Norm factor has a positive effect on the intention to use Digital banking of elderly customers with standardized regression coefficient (β = 0.179, p-value = 0.013, reliability of 99%), and has the lowest explanatory level compared to that in previous studies due to the difference in research subjects and the survey size. This is consistent with behavioral psychology because elderly customers who intend to use digital banking services shall be impacted by family, friends and society [Ahmad et al., 2020; Dai, Palvi, 2009; Pavlou, Fygenson, 2006].

Carrying out bootstrap with repeated sample N = 750, the author shows that the estimates in the research model are reliable because when estimating 750 samples are averaged with the bias still within acceptable limits (as shown in Table 7).

Table 7.

Results estimated by bootstrap with N = 750

Relationship			SE	SE-SE	Average	Bias	SE-Bias	C/R
IU	←	BC	0.076	0.002	0.345	–0.004	0.003	(1.33)
IU	←	RP	0.06	0.002	0.103	0	0.002	0.00
IU	←	PU	0.052	0.001	–0.201	0.004	0.002	2.00
IU	←	PE	0.065	0.002	0.288	0	0.002	0.00
IU	←	SN	0.071	0.002	0.185	0.006	0.003	2.00
IU	←	AT	0.071	0.002	0.16	0.001	0.003	0.33

Note: SE – Standard Error; SE-SE – Standard Error-Standard Deviation; Bias – bias; SE-Bias – standard deviation of the bias.

Source: summarized by the author.

5. Conclusions and Implications

Regarding older customers who intend to use digital banking services in an emerging market like Vietnam, this study has made important empirical contributions as this is perhaps the first typical study involving digital technology for older adults in emerging markets.

First, the study applies the TAM model to examine factors affecting the intention to use digital technology among the elderly in Vietnam in the context that the accessibility of digital technology for elderly customers has received a lot of attention in recent times.

Second, this research has added two variables including Subjective Norms and Behavioral Control factors to the model to better understand how the intention to use digital technology services of the elderly in Vietnam is affected by social norms and other environmental barriers such as lack of intenet access, training, and technical supports.

Third, this study has contributed in-depth insights in this area related to Perceived Usefulness and Ease of Use that play a very important role in the decision to use digital banking services among the elderly. The risk negatively affects the intention to use digital banking of elderly customers, which implies that bank administrators should be more cautious about the security, privacy, and other confidential information of users, especially that of the elderly. To banking managers, this research results will have significant implications because it is critically important for bank administrators to develop better strategies with more efficient and effective financial services through online platforms to serve older users in emerging markets like Vietnam.

Finally, the findings of this study may also enable technology professionals in the banking sector to invent or upgrade current financial services to meet various needs of diverse range of customers.

Besides, the author focuses on surveying 6 factors that affect the intention to use digital banking, and data used for analysis are among the elderly customers in Vietnam only, which is the limitation of the study. Therefore, subsequent studies can either concentrate on different age range to enhance the study's reliability or supplement diferent factors that have not been studied in the research model.

Appendix

Table A1.

Results of EFA analysis

Pattern Matrix[a]

	Component						
	1	2	3	4	5	6	7
BC4	0.886						
BC2	0.827						
BC1	0.786						
BC3	0.784						
BC5	0.761						
RP2		0.942					
RP4		0.897					
RP1		0.895					
RP3		0.895					
PU1			0.911				
PU3			0.906				

Continues

Pattern Matrix[a]

	Component						
	1	2	3	4	5	6	7
PU2			0.877				
PU4			0.818				
PE3				0.915			
PE4				0.880			
PE2				0.873			
PE1				0.627			
AT3					0.833		
AT2					0.827		
AT4					0.801		
AT1					0.667		
SN4						0.880	
SN2						0.815	
SN1						0.734	
SN3						0.537	
IU3							0.792
IU1							0.790
IU2							0.775
Direction wrong quote	24.290	36.700	46.674	56.250	62.266	67.231	71.173
Eigenvalue	6.801	3.475	2.792	2.681	1.685	1.390	1.104
KMO and Bartlett's Test	Approx. Chi-Square				5713.933		
	df				378		
	Sig				0.000		

Source: Data analysis results from the author.

Table A2.

Composite Reliability, Average Variance Extracted, Correlation Coefficients

Factor	Composite Reliability (CR)	Average Variance Extracted (AVE)	Correlation Coefficients						
	CR	AVE	IU	BC	RP	PU	PE	SN	AT
IU	0.803	0.577	**1.000**						
BC	0.877	0.590	0.544	**1.000**					
RP	0.931	0.770	0.024	-0.004	**1.000**				
PU	0.916	0.734	0.508	0.559	0.049	**1.000**			
PE	0.862	0.619	0.171	0.109	-0.009	0.083	**1.000**		
SN	0.819	0.606	0.092	-0.014	-0.009	0.008	-0.004	**1.000**	
AT	0.813	0.591	0.483	0.466	-0.187	0.530	0.190	0.307	**1.000**

Note: Intention to use scale (IU); Scale of Perceived Behavioral Control (BC); Risk Perception (RP) scale; The Perceived Usefulness scale; Perceived Ease of Use (PE) scale; Subjective Norm (SN) scale; Attitude (AT) Scal.

Table A3.

Correlation matrix to evaluate the discriminant value of the research scale

Factor	Correlation Coefficients						
	IU	BC	RP	PU	PE	SN	AT
IU	**0.760**						
BC	0.544	**0.768**					
RP	0.024	–0.004	**0.878**				
PU	0.508	0.559	0.049	**0.857**			
PE	0.171	0.109	–0.009	0.083	**0.787**		
SN	0.092	–0.014	–0.009	0.008	–0.004	**0.778**	
AT	0.483	0.466	–0.187	0.530	0.190	0.307	**0.796**

Intention to Use scale (IU); Scale of Perceived Behavioral Control (BC); Risk Scale (RP); Perceived Usefulness scale; Perceived Ease of Use (PE) Scale; Subjective Norm (SN) scale; Attitude (AT) scale.

Note: The value is the square root of AVE (in bold on diagonal).

* *
*

References

Abu-Bader S.H., Rogers A., Barusch A.S. (2003) Predictors of Life Satisfaction in Frail Elderly. *Journal of Gerontological Social Work,* 38, 3, pp. 3–17.

Ahmad A., Rasul T., Yousaf A., Zaman U. (2020) Understanding Factors Influencing Elderly Diabetic Patients' Continuance Intention to Use Digital Health The Author Arables: Extending the Technology Acceptance Model (TAM). *Journal of Open Innovation: Technology, Market, and Complexity*, 6, 3, pp. 1–15.

Ajzen I. (1991) The Theory of Planned Behavior. *Organizational Behavior and Human Decision Processes*, 50, 2, pp. 179–211.

Alalwan A.A., Algharabat R.S., Baabdullah A.M., Rana N.P., Raman R., Dwivedi R., Aljafari A. (2019) Examining the Impact of Social Commerce Dimensions on Customers' Value Cocreation: The Mediating Effect of Social Trust. *Journal of Consumer Behaviour,* 18, 6, pp. 431–446.

Alalwan A.A., Dwivedi Y.K., Rana N.P., Algharabat R. (2018) Examining Factors Influencing Jordanian Customers' Intentions and Adoption of Internet Banking: Extending UTAUT2 with Risk. *Journal of Retailing and Consumer Services,* 40, pp. 125–138.

Alalwan A.A., Dwivedi Y.K., Rana N.P., Simintiras A.C. (2016) Jordanian Consumers' Adoption of Telebanking Influence of Perceived Usefulness, Trust and Self-Efficacy. *International Journal of Bank Marketing*, 34, 5, pp. 690–709.

Alnemer H. A. (2022) Determinants of Digital Banking Adoption in the Kingdom of Saudi Arabia: A Technology Acceptance Model Approach. *Digital Business,* 2, 2, 100037.

Ananda S., Devesh S., Al Lawati A.M. (2020) What Factors Drive the Adoption of Digital Banking? An empirical study from the perspective of Omani retail banking. *Journal of Financial Services Marketing,* 25, 1, pp. 14–24.

Anggraeni R., Hapsari R., Muslim N.A. (2021) Examining Factors Influencing Consumers Intention and Usage of Digital banking: Evidence from Indonesian Digital banking Customers. *APMBA (Asia Pacific Management and Business Application,* 9, 3, pp. 193–210.

Anouze A.L.M., Alamro A.S. (2019) Factors Affecting Intention to Use e-banking in Jordan. *International Journal of Bank Marketing*.

Baabdullah A.M., Alalwan A.A., Rana N.P., Kizgin H., Patil P. (2019) Consumer Use of Mobile Banking (M-Banking) in Saudi Arabia: Towards an Integrated Model. *International Journal of Information Management,* 44, pp. 38–52.

Bagozzi R.P., Yi Y., Phillips L.W. (1991) Assessing Construct Validity in Organizational Research. *Administrative Science Quarterly*, pp. 421–458.

Baldwin R., Mauro B.W.D. (2020) *Economics in the Time of COVID-19*. CFRP Press.

Bharti M. (2016) Impact of Dimensions of Mobile Banking on User Satisfaction. *The Journal of Internet Banking and Commerce,* 21, 1.

Bobillier-Chaumon M.-E., Michel C., Tarpin-Bernard F., Croisile B. (2014) Can ICT Improve the Quality of Life of Elderly Adults Living in Residential Home Care Units? From Actual Impacts to Hidden Artefacts. *Behaviour & Information Technology,* 33, 6, pp. 574–590.

Braun M.T. (2013) Obstacles to Social Networking Website Use among Older Adults. *Computers in Human Behavior,* 29, 3, pp. 673–680.

Chau P.Y., Lai V.S. (2003) An Empirical Investigation of the Determinants of User Acceptance of Internet Banking. *Journal of Organizational Computing and Electronic Commerce,* 13, 2, pp. 123–145.

Chen K., Chan A.H. (2014) Predictors of Gerontechnology Acceptance by Older Hong Kong Chinese. *Technovation,* 34, 2, pp. 126–135.

Chen L., Chen T.L., Lin C.J., Liu H.K.J. (2019) Preschool Teachers' Perception of the Application of Information Communication Technology (ICT) in Taiwan. *Sustainability,* 11, 1, 114, pp. 1–13.

Chi V.T.K. (2021) Analysis of Multiple Factors Changing Customers' Intention to Use E-banking in Vietnam. *TNU Journal of Science and Technology,* 226, 09, pp. 46–56.

Choudrie J., Junior C.O., McKenna B., Richter S. (2018) Understanding and Conceptualising the Adoption, Use and Diffusion of Mobile Banking in Older Adults: A Research Agenda and Conceptual Framework. *Journal of Business Research,* 88, 1, pp. 449–465.

Cotten S.R., Ford G., Ford S., Hale T.M. (2014) Internet Use and depression among Retired Older Adults in the United States: A Longitudinal Analysis. *Journals of Gerontology Series B: Psychological Sciences and Social Sciences,* 69, 5, pp. 763–771.

Dai H., Palvi P.C. (2009) Mobile Commerce Adoption in China and the United States: A Cross-Cultural Study. *ACM SIGMIS Database: the DATABASE for Advances in Information Systems,* 40, 4, pp. 43–61.

Davis F.D. (1989) Perceived Usefulness, Perceived Ease of Use, and User Acceptance of Information Technology. *MIS Quarterly*, pp. 319–340.

Deng Z., Mo X., Liu S. (2014) Comparison of the Middle-Aged and Older Users' Adoption of Mobile Health Services in China. *International Journal of Medical Informatics,* 83, 3, pp. 210–224.

Dutot V., Bhatiasevi V., Bellallahom N. (2019) Applying the Technology Acceptance Model in a Three-Countries Study of Smartwatch Adoption. *The Journal of High Technology Management Research,* 30, 1, pp. 1–14.

Egala S.B., Boateng D., Mensah S.A. (2021) To Leave or Retain? An Interplay between Quality Digital Banking and Customer Satisfaction. *International Journal of Bank Marketing*, 39, 7, pp. 1420–1445.

Fishbein M., Ajzen I. (1977) Belief, Attitude, Intention, and Behavior: An introduction to Theory and Research. *Philosophy and Rhetoric,* 10, 2.

Fornell C., Larcker D.F. (1981) Evaluating Structural Equation Models with Unobservable Variables and Measurement Error. *Journal of Marketing Research,* 18, 1, pp. 39–50.

Francis J., Rikard R., Cotten S.R., Kadylak T. (2019) Does ICT Use Matter? How Information and Communication Technology Use Affects Perceived Mattering among a Predominantly Female Sample of Older Adults Residing in Retirement Communities. *Information, Communication & Society,* 22, 9, pp. 1281–1294.

Giao H.N.K., Đạt H.M. (2014) Evaluation of Commercial Banking Selection Factors in Ho Chi Minh City. *Journal of Economics and Development,* 280, 1, pp. 97–115.

Glavee-Geo R., Shaikh A.A., Karjaluoto H., Hinson R.E. (2020) Drivers and Outcomes of Consumer Engagement: Insights from Mobile Money Usage in Ghana. *International Journal of Bank Marketing,* 38, 1, pp. 1–20.

Hair J., Black W., Babin B., Anderson R. (2009) *Multivariate Data Analysis*. Upper Saddle River, NJ [etc.]. Pearson Prentice Hall, New York, NY: Macmillan, 24, 899.

Hair J.F., Babin B.J., Krey N. (2017) Covariance-Based Structural Equation Modeling in the Journal of Advertising: Review and recommendations. *Journal of Advertising,* 46, 1, pp. 163–177.

Hamidi H., Safareeyeh M. (2019) A Model to Analyze the Effect of Mobile Banking Adoption on Customer Interaction and Satisfaction: A Case Study of m-banking in Iran. *Telematics and Informatics,* 38, 1, pp. 166–181.

Haq I.U., Awan T.M. (2020) Impact of e-banking Service Quality on e-loyalty in Pandemic Times through Interplay of e-satisfaction. *Vilakshan–XIMB Journal of Management*.

Hu L., Bentler P.M. (1999) Cutoff Criteria for Fit Indexes in Covariance Structure Analysis: Conventional Criteria Versus New Alternatives. *Structural Equation Modeling: A Multidisciplinary Journal,* 6, 1, pp. 1–55.

Hulland J., Chow Y. H., Lam S. (1996) Use of Causal Models in Marketing Research: A Review. *International Journal of Research in Marketing,* 13, 2, pp. 181–197.

Hutton D. (2008) Older People in Emergencies: Considerations for Action and Policy Development. *World Health Organization,* pp. 1–44.

Kaur B., Kiran S., Grima S., Rupeika-Apoga R. (2021) Digital Banking in Northern India: The Risks on Customer Satisfaction. *Risks,* 9, 11, 209, pp. 1–18.

Ke C., Lou V.W., Tan K.C., Wai M.Y., Chan L.L. (2020) Changes in Technology Acceptance among Older People with Dementia: The Role of Social Robot Engagement. *International Journal of Medical Informatics,* 141, 104241.

Kim K.J., Shin D.-H. (2015) An Acceptance Model for Smart Watches: Implications for the Adoption of Future Wearable Technology. *Internet Research*, 25, 4.

Kizgin H., Jamal A., Dey B.L., Rana N.P. (2018) The Impact of Social Media on Consumers' Acculturation and Purchase Intentions. *Information Systems Frontiers,* 20, 3, pp. 503–514.

Kumar R.M., Ramakrishnan L., Krishnamacharyulu C. (2021) Review of e-customer Loyalty in Internet Banking. *Webology*, 18, pp. 280–287.

Lai H.J. (2020) Investigating Older Adults' Decisions to Use Mobile Devices for Learning, Based on the Unified Theory of Acceptance and Use of Technology. *Interactive Learning Environments,* 28, 7, pp. 890–901.

Li J., Ma Q., Chan A.H., Man S. (2019) Health Monitoring through Wearable Technologies for Older Adults: Smart The Author Arables Acceptance Model. *Applied Ergonomics,* 75, pp. 162–169.

Liébana-Cabanillas F., Marinković V., Kalinić Z. (2017) A SEM Neural Network Approach for Predicting Antecedents of M-Commerce Acceptance. *International Journal of Information Management,* 37, 2, pp. 14–24.

Ling G.M., Fern Y.S., Boon L.K., Huat T.S. (2016) Understanding Customer Satisfaction of Internet Banking: A case study in Malacca. *Procedia Economics and Finance*, 37, 1, pp. 80–85. Doi: https://doi.org/10.1016/S2212-5671(16)30096-X

Liu G.-S., Tai P.T. (2016) A Study of Factors Affecting the Intention to Use Mobile Payment Services in Vietnam. *Economics World,* 4, 6, pp. 249–273.

Luarn P., Lin H.-H. (2005) Toward an Understanding of the Behavioral Intention to Use Mobile Banking. *Computers in Human Behavior,* 21, 6, pp. 873–891.

Martins C., Oliveira T., Popovic A. (2014) Understanding the Internet Banking Adoption: A Unified Theory of Acceptance and Use of Technology and Perceived Risk Application. *International Journal of Information Management,* 34, 1, pp. 1–13.

Mbama C.I., Ezepue P., Alboul L., Beer M. (2018) Digital Banking, Customer Experience and Financial Performance: UK Bank Managers' Perceptions. *Journal of Research in Interactive Marketing,* 12, 1, pp. 432–451.

Merhi M., Hone K., Tarhini A., Ameen N. (2020) An Empirical Examination of the Moderating Role of Age and Gender in Consumer Mobile Banking Use: A Cross-National, Quantitative Study. *Journal of Enterprise Information Management*.

Meuter M.L., Ostrom A.L., Bitner M.J., Roundtree R. (2003) The Influence of Technology Anxiety on Consumer Use and Experiences with Self-Service Technologies. *Journal of Business Research,* 56, 11, pp. 899–906.

Mitzner T.L., Boron J.B., Fausset C.B., Adams A.E., Charness N., Czaja S. J.,... Sharit J. (2010) Older Adults Talk Technology: Technology Usage and Attitudes. *Computers in Human Behavior,* 26, 6, pp. 1710–1721.

Montazemi A.R., Qahri-Saremi H. (2015) Factors Affecting Adoption of Online Banking: A Meta-Analytic Structural Equation Modeling Study. *Information & Management*, 52, 2, pp. 210–226.

Nam U.V., Duc N.M. (2021) *Aging Population and the Elderly in Vietnam*. Avialable at: https://www.gso.gov.vn/wp-content/uploads/2021/2008/Dan-so-gia-hoaVI.pdf

Nef T., Ganea R.L., Müri R.M., Mosimann U.P. (2013) Social Networking Sites and Older Users – A Systematic Review. *International Psychogeriatrics,* 25, 7, pp. 1041–1053.

Nguyen T.T., Nguyen H.T., Mai H.T., Tran T.T.M. (2020) Determinants of Digital Banking in Vietnam: Applying UTAUT2 Model. *Asian Economic and Financial Review,* 10, 6, pp. 680–697.

Nunnally J.C. (1994) *Psychometric Theory 3E*. Tata McGraw-Hill Education.

Oruç Ö.E., Tatar Ç. (2017) An Investigation of Factors that Affect Internet Banking Usage Based on Structural Equation Modeling. *Computers in Human Behavior,* 66, 1, pp. 232–235.

Ozili P.K. (2018) Banking Stability Determinants in Africa. *International Journal of Managerial Finance,* 14, 4, pp. 462–483.

Pan S., Jordan-Marsh M. (2010) Internet Use Intention and Adoption among Chinese Older Adults: From the Expanded Technology Acceptance Model Perspective. *Computers in Human Behavior,* 26, 5, pp. 1111–1119.

Paul T.J. (2009) *Marketing for Middle-Aged Customers*.

Pavlou P.A., Fygenson M. (2006) Understanding and Predicting Electronic Commerce Adoption: An Extension of the Theory of Planned Behavior. *MIS Quarterly*, pp. 115–143.

Picoto W.N., Pinto I. (2021) Cultural Impact on Mobile Banking Use –A Multi-Method Approach. *Journal of Business Research,* 124, pp. 620–628.

Quaosar G.A.A., Hoque M.R., Bao Y. (2018) Investigating Factors Affecting Elderly's Intention to Use M-Health Services: An Empirical Study. *Telemedicine and e-Health,* 24, 4, pp. 309–314.

Seetharaman P. (2020) Business Models Shifts: Impact of Covid-19. *International Journal of Information Management,* 54, 102173

Simonson M.R., Maurer M., Montag-Torardi M., Whitaker M. (1987) Development of a Standardized Test of Computer Literacy and a Computer Anxiety Index. *Journal of Educational Computing Research,* 3, 2, pp. 231–247.

Singh N., Sinha N., Liébana-Cabanillas F.J. (2020) Determining Factors in the Adoption and Recommendation of Mobile Wallet Services in India: Analysis of the Effect of Innovativeness, Stress to Use and Social Influence. *International Journal of Information Management,* 50, pp. 191–205.

Singh N., Srivastava S., Sinha N. (2017) Consumer Preference and Satisfaction of M-Wallets: A Study on North Indian Consumers. *International Journal of Bank Marketing,* 35, 6.

Singh S., Srivastava R.K. (2020) Understanding the Intention to Use Mobile Banking by Existing Online Banking Customers: An Empirical Study. *Journal of Financial Services Marketing*, 25, 3, pp. 86–96.

Steenkamp J.-B.E., Van Trijp H.C. (1991) The Use of LISREL in Validating Marketing Constructs. *International Journal of Research in Marketing,* 8, 4, pp. 283–299.

Suoranta M., Mattila M. (2004) Mobile Banking and Consumer Behaviour: New Insights into the Diffusion Pattern. *Journal of Financial Services Marketing,* 8, 4, pp. 354–366.

Takieddine S., Sun J. (2015) Internet Banking Diffusion: A Country-Level Analysis. *Electronic Commerce Research and Applications,* 14, 5, pp. 361–371.

Tam C., Oliveira T. (2017) Literature Review of Mobile Banking and Individual Performance. *International Journal of Bank Marketing,* 35, 7, pp. 1042–1065.

Taylor S., Todd P. (1995) Decomposition and Crossover Effects in the Theory of Planned Behavior: A Study of Consumer Adoption Intentions. *International Journal of Research in Marketing,* 12, 2, pp. 137–155.

Trang N.M. (2022) The Influence of Personal Characteristics on Customers' Perception of E-Banking Service Quality and Cost Effectiveness in Vietnam. *Open Journal of Social Sciences,* 10, 1, pp. 377–391.

Tsai H.-Y.S., Shillair R., Cotten S.R., Winstead V., Yost E. (2015) Getting Grandma Online: Are Tablets the Answer for Increasing Digital Inclusion for Older Adults in the U.S.? *Educational Gerontology,* 41, 10, pp. 695–709. Doi:10.1080/03601277.2015.1048165

Tural E., Lu D., Cole D.A. (2020) Factors Predicting Older Adults' Attitudes Toward and Intentions to Use Stair Mobility Assistive Designs at Home. *Preventive Medicine Reports,* 18, 101082.

Venkatesh V., Davis F. (2000) A Theoretical Extension of the Technology Acceptance Model: Four Longitudinal Field Studies. *Management Science,* 46, 2, pp. 186–204. Doi: 10.1287/mnsc.46.2.186.11926

Wojcik D., Loannou S. (2020) COVID-19 and Finance: Market Developments So Far and Potential Impacts on the Financial Sector and Centres. *Tijdschrift Voor Economische en Sociale Geografie,* 111, 3, pp. 387–400.

Wang Q., Sun X. (2016) Investigating Gameplay Intention of the Elderly Using an Extended Technology Acceptance Model (ETAM). *Technological Forecasting and Social Change,* 107, pp. 59–68.

Wikipedia (2012) *Adobe Authorware*. Retrieved September.

Windasari N.A., Kusumawati N., Larasati N., Amelia R.P. (2022) Digital-Only Banking Experience: Insights from Gen Y and Gen Z. *Journal of Innovation & Knowledge,* 7, 2, 100170.

Zhou M., Zhao L., Kong N., Campy K.S., Qu S., Wang S. (2019) Factors Influencing Behavior Intentions to Telehealth by Chinese Elderly: An Extended TAM Model. *International Journal of Medical Informatics,* 126, pp. 118–127.